ITEM	DRAWING or PART No.	ITEM DESCRIPTION	PRODUCT	MATERIAL DESCRIPTION	LENGTH	MATERIAL	QTY	REMARKS

BUCKET NOT SHOW
IN PLAN VIEW
FOR CLARITY

SAFE WORKING LOAD = 1500 kg.

APPROXIMATE MASS OF BIN = 460 kg

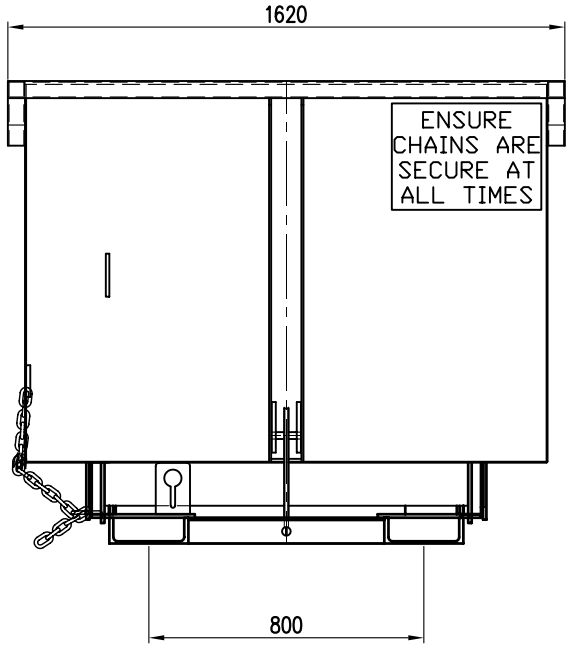

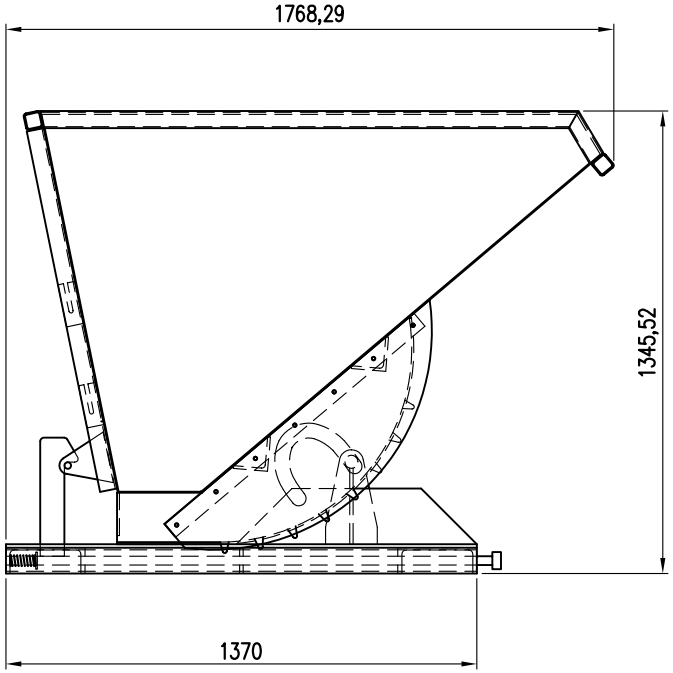

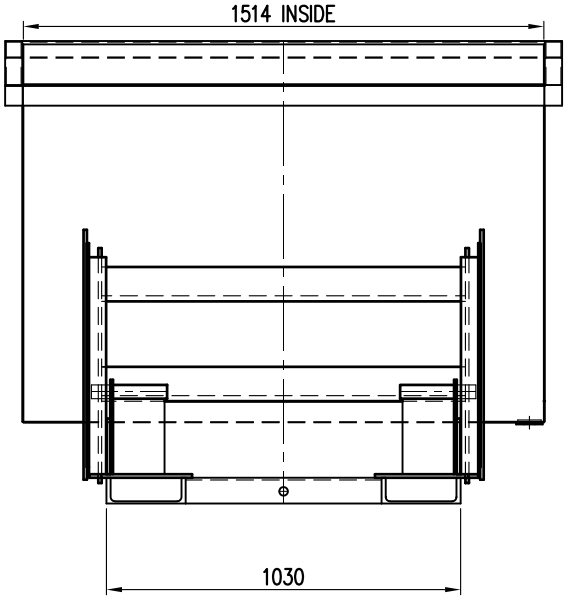

ITEM	DRAWING or PART No.	ITEM DESCRIPTION	PRODUCT	MATERIAL DESCRIPTION	LENGTH	MATERIAL	QTY	REMARKS

ITEM	DRAWING or PART No.	ITEM DESCRIPTION	PRODUCT	MATERIAL DESCRIPTION	LENGTH	MATERIAL	QTY	REMARKS

PROPERTY OF J.J.RICHARDS ENGINEERING PTY LTD
A DIVISION OF J.J. RICHARDS & SONS
THE INFORMATION ON THIS DRAWING IS CONFIDENTIAL & IS NOT AUTHORISED FOR TRANSFER TO A THIRD PARTY.

IF IN DOUBT ASK

J.J. Richards Engineering PTY LTD

UNLESS OTHERWISE STATED DIMENSIONS IN MILLIMETERS
TOLERANCES
LINEAR : – ± 0.5mm
MACHINING : – ± 0.1mm
ANGULAR : – ± 0.5°

REMOVE ALL SHARP EDGES AND BURRS

TITLE: 1.5m3 TIPPLER BIN OVERALL DIMENSIONS

DRAUGHTING STD : AS1100	ECN NUMBER	SCALE	1 :	APP'D	MJS	REV	REV DATE	A3 -J26-233
DO NOT SCALE	JJR -	DRAWN	MJS	DATE	17-5-06	A		