ITEM	DRAWING or PART No.	ITEM DESCRIPTION	PRODUCT	MATERIAL DESCRIPTION	LENGTH	MATERIAL	QTY	REMARKS

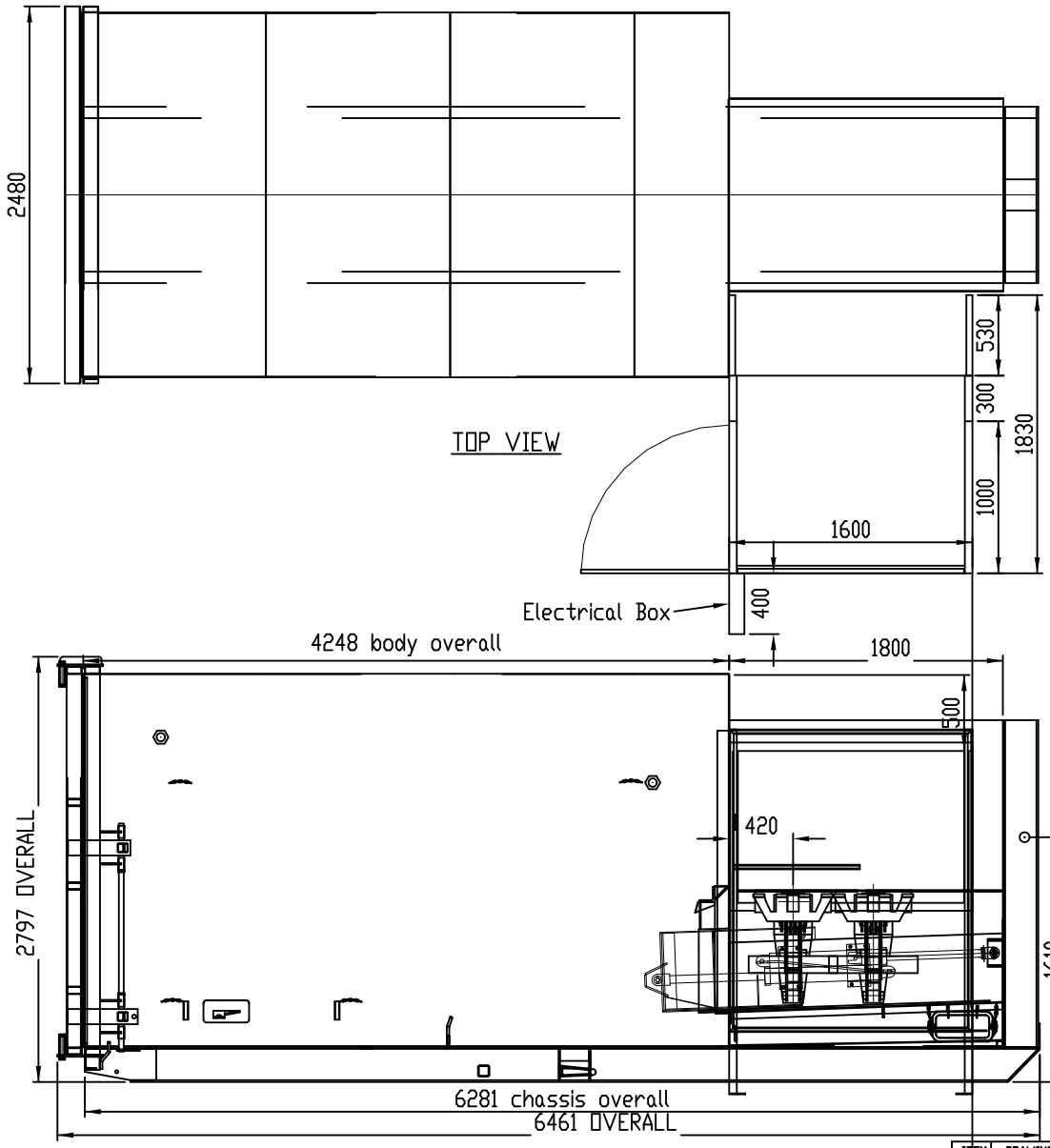

TOP VIEW

RH SIDE VIEW

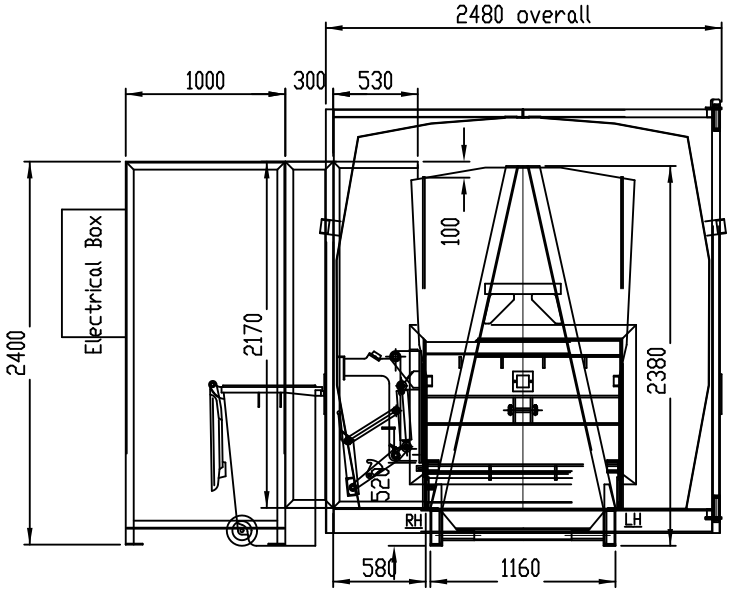

ITEM	DRAWING or PART No.	ITEM DESCRIPTION	PRODUCT	MATERIAL DESCRIPTION	LENGTH	MATERIAL	QTY	REMARKS

PROPERTY OF J.J.RICHARDS ENGINEERING PTY LTD
A DIVISION OF J.J. RICHARDS & SONS
THE INFORMATION ON THIS DRAWING IS CONFIDENTIAL & IS NOT AUTHORISED FOR TRANSFER TO A THIRD PARTY.

IF IN DOUBT ASK

J.J. Richards Engineering PTY LTD

UNLESS OTHERWISE STATED
DIMENSIONS IN MILLIMETERS
TOLERANCES
LINEAR : - ± 0.5mm
MACHINING : - ± 0.1mm
ANGULAR : - ± 0.5°

REMOVE ALL SHARP EDGES AND BURRS

TITLE
23 m3 UNI-PAC
GA with Cage to suit 660 l MGB Lifter

DRAUGHTING STD : AS1100	ECN NUMBER	SCALE	1 :	APP'D		REV	REV DATE	A3 -J26 -268
DO NOT SCALE	JJR -	DRAWN	TA	DATE	31-5-07	A		

ITEM	DRAWING or PART No.	ITEM DESCRIPTION	PRODUCT	MATERIAL DESCRIPTION	LENGTH	MATERIAL	QTY	REMARKS