ITEM	DRAWING or PART No.	ITEM DESCRIPTION	PRODUCT	MATERIAL DESCRIPTION	LENGTH	MATERIAL	QTY	REMARKS

ACCO 2350 G 6 X 4

TARE WEIGHT	10 920 KG
G.V.M. (QLD. & N.S.W.)	22.5 000 KG
TURNING RADIUS	
KERB TO KERB	10.5 M
WALL TO WALL	11.5 M
WHEEL BASE	5.2 M
OVERALL LENGTH	9.84 M
OVERALL WIDTH	2.48 M
OVERALL HEIGHT	3.39 M

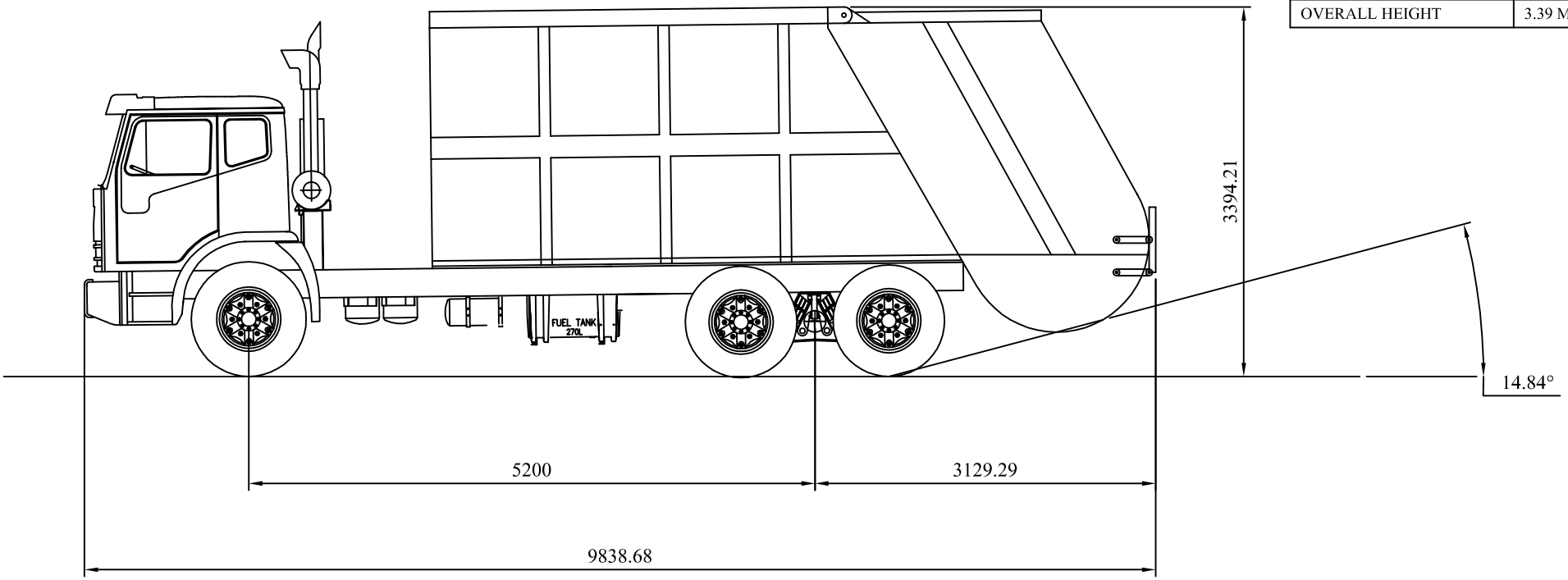

ITEM	DRAWING or PART No.	ITEM DESCRIPTION	PRODUCT	MATERIAL DESCRIPTION	LENGTH	MATERIAL	QTY	REMARKS

PROPERTY OF J.J.RICHARDS ENGINEERING PTY LTD
A DIVISION OF J.J. RICHARDS & SONS
THE INFORMATION ON THIS DRAWING IS CONFIDENTIAL & IS NOT AUTHORISED FOR TRANSFER TO A THIRD PARTY.

IF IN DOUBT ASK

J.J. Richards Engineering PTY LTD

UNLESS OTHERWISE STATED DIMENSIONS IN MILLIMETERS
TOLERANCES
LINEAR : – ± 0.5mm
MACHINING : – ± 0.1mm
ANGULAR : – ± 0.5°

REMOVE ALL SHARP EDGES AND BURRS

TITLE 6 X 4 REAR LOADER GARBAGE TRUCK OVERALL DIMENSIONS

DRAUGHTING STD : AS1100	ECN NUMBER	SCALE	1 : 40	APPD	MJS	REV	REV DATE	A3 -J26 -151
DO NOT SCALE	JJR -	DRAWN	MJS	DATE	24-11-04	A		