DO NOT SCALE PRINTS – IF IN DOUBT ASK REMOVE ALL SHARP EDGES & BURRS

ITEM	DWG/PART No.	ITEM DESC.	PRODUCT	MATERIAL DESCRIPTION	LENGTH	MATERIAL	QTY	REMARKS

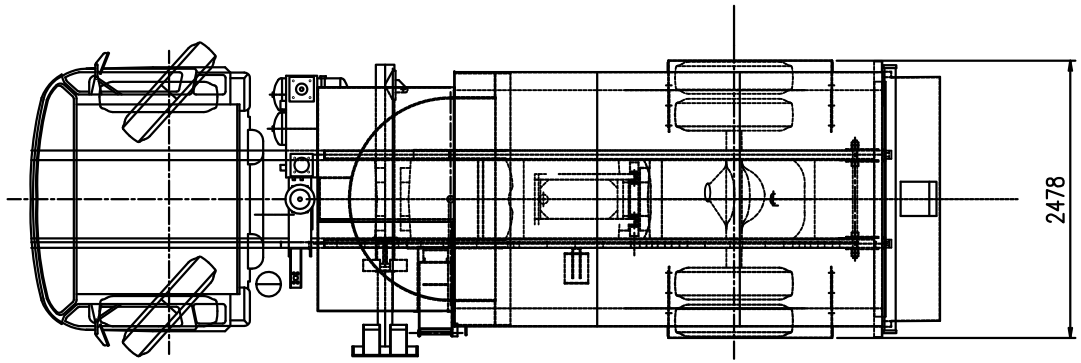

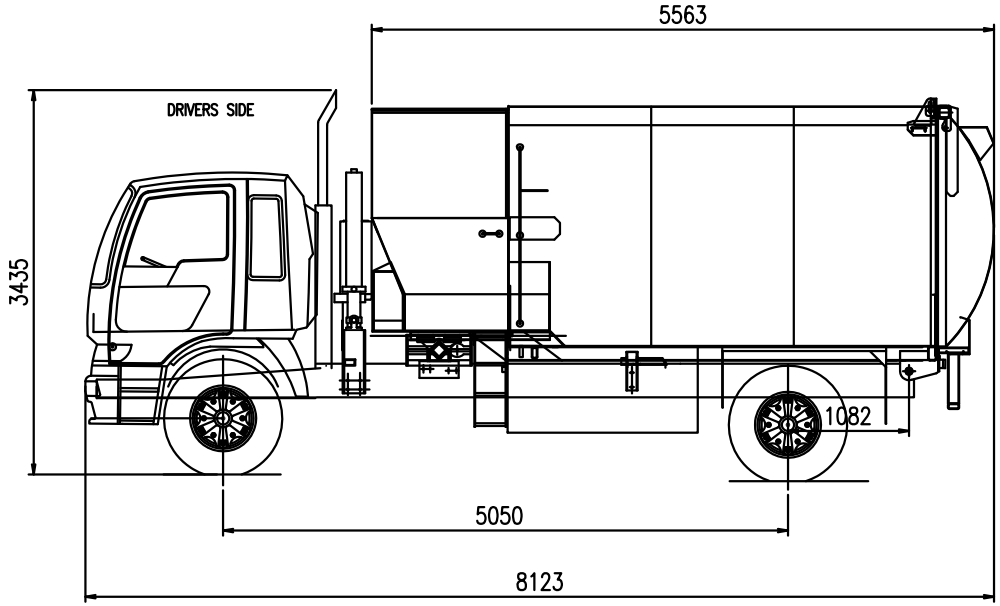

ACCO 2350 G 4 X 2	
BODY	TWP/19/DC/C
CAPACITY	18.6 CUBIC METRES
LIFTER	CAMERA GRAB LIFTER
TARE WEIGHT	9 700 KG
G.V.M. (QLD. & N.S.W.)	15 000 KG
G.V.M. (VIC.)	16 000 KG
TURNING RADII	
KERB TO KERB	8.5 M
WALL TO WALL	9.5 M
WHEEL BASE	5.0 M
OVERALL LENGTH	8.13 M
OVERALL WIDTH	2.48 M
OVERALL HEIGHT	3.44 M

ITEM	DWG/PART No.	ITEM DESC.	PRODUCT	MATERIAL DESCRIPTION	LENGTH	MATERIAL	QTY	REMARKS

PROPERTY OF TRANSWASTE ENGINEERING PTY LTD
A DIVISION OF J.J. RICHARDS & SONS
THE INFORMATION ON THIS DRAWING IS CONFIDENTIAL & IS NOT AUTHORISED FOR TRANSFER TO A THIRD PARTY.

MATERIAL

J.J. RICHARDS ENGINEERING PTY LTD

UNLESS OTHERWISE STATED DIMENSIONS IN MILLIMETERS
TOLERANCES
LINEAR : – ± 0.5mm
MACHINING : – ± 0.1mm
ANGULAR : – ± 30'

ECN Number

TITLE: 4 X 2 DOMESTIC GARBAGE TRUCK
HINO CHASSIS OVERALL DIMENSIONS

DRAFTING STANDARD: AS1100

SCALE	1:50	APP'D		DRAWING No.	A3 - J26 - 015
DRAWN	MJS	DATE	3/9/02	REV	REV DATE