DO NOT SCALE PRINTS – IF IN DOUBT ASK	REMOVE ALL SHARP EDGES & BURRS	ITEM	DWG/PART No.	ITEM DESC.	PRODUCT	MATERIAL DESCRIPTION	LENGTH	MATERIAL	QTY	REMARKS

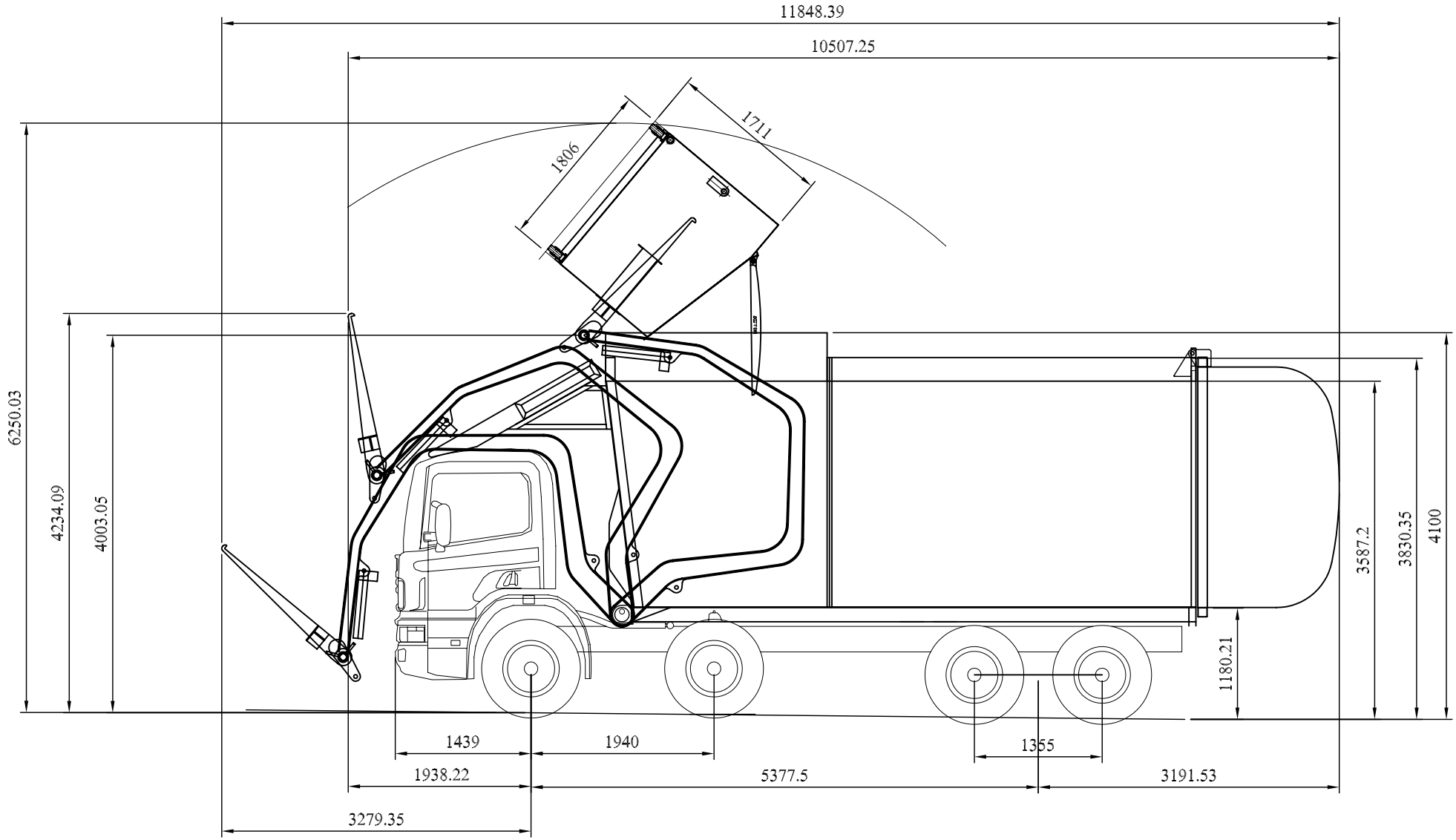

TRAVEL HEIGHT = 4.3 M
MAX WORKING HEIGHT = 6.25 M
MAX OPERATING WEIGHT = 27.5 TONNE
MAX WIDTH = 2.49 M
TURNING RADIUS
WALL TO WALL = 11.5 M
KERB TO KERB = 10.8 M

ITEM	DWG/PART No.	ITEM DESC.	PRODUCT	MATERIAL DESCRIPTION	LENGTH	MATERIAL	QTY	REMARKS

ITEM	DWG/PART No.	ITEM DESC.	PRODUCT	MATERIAL DESCRIPTION	LENGTH	MATERIAL	QTY	REMARKS

PROPERTY OF TRANSWASTE ENGINEERING PTY LTD
A DIVISION OF J.J. RICHARDS & SONS
THE INFORMATION ON THIS DRAWING IS CONFIDENTIAL & IS NOT AUTHORISED FOR TRANSFER TO A THIRD PARTY.

MATERIAL

J.J. RICHARDS ENGINEERING PTY LTD

UNLESS OTHERWISE STATED DIMENSIONS IN MILLIMETERS
TOLERANCES
LINEAR : – ± 0.5mm
MACHINING : – ± 0.1mm
ANGULAR : – ± 0.5°

ECN Number
JJR–

DRAFTING STANDARD
AS1100

TITLE
MAXPACK 8 x 4 OVERHEAD LOADER
SCANIA CHASSIS OVERALL DIMENSIONS

SCALE	1:40	APP'D		DRAWING No.	A3 - J26 - 153
DRAWN	Ron Reinke	DATE	25/06/03	REV	A	REV DATE