DO NOT SCALE PRINTS – IF IN DOUBT ASK | REMOVE ALL SHARP EDGES & BURRS

| ITEM | DWG/PART No. | ITEM DESC. | PRODUCT | MATERIAL DESCRIPTION | LENGTH | MATERIAL | QTY | REMARKS |
|---|---|---|---|---|---|---|---|---|

TRAVEL HEIGHT = 4.3 M
MAX WORKING HEIGHT = 6.16 M
MAX OPERATING WEIGHT = 27.5 TONNE
MAX WIDTH = 2.49 M
TURNING CIRCLE RADII
WALL TO WALL = 10.1 M
KERB TO KERB = 9.3 M
INSIDE OF TRUCK = 4.8 M

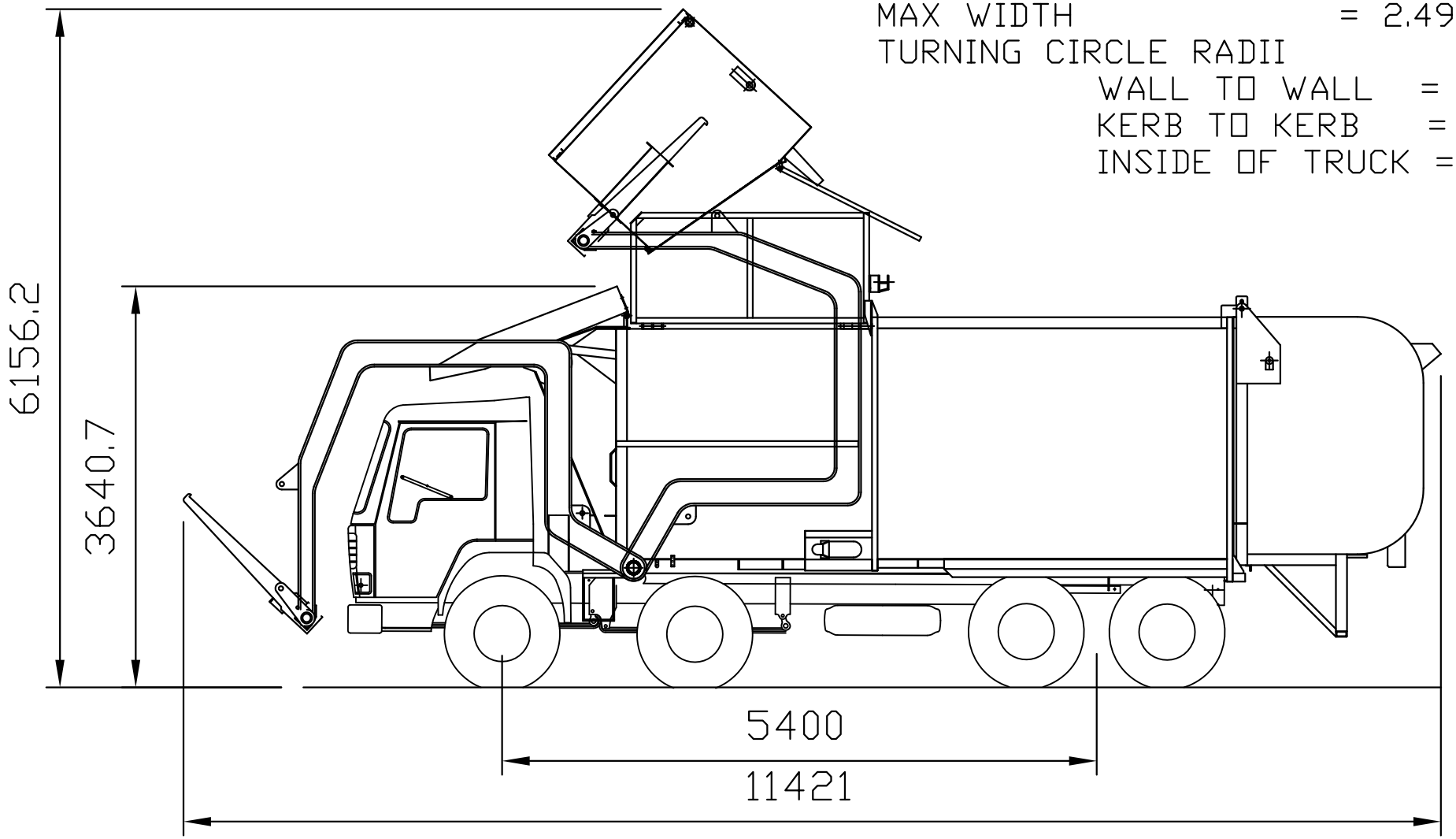


| ITEM | DWG/PART No. | ITEM DESC. | PRODUCT | MATERIAL DESCRIPTION | LENGTH | MATERIAL | QTY | REMARKS |
|---|---|---|---|---|---|---|---|---|

PROPERTY OF TRANSWASTE ENGINEERING PTY LTD
A DIVISION OF J.J. RICHARDS & SONS
THE INFORMATION ON THIS DRAWING IS CONFIDENTIAL & IS NOT AUTHORISED FOR TRANSFER TO A THIRD PARTY.

MATERIAL

J.J. RICHARDS ENGINEERING PTY LTD

UNLESS OTHERWISE STATED DIMENSIONS IN MILLIMETERS
TOLERANCES
LINEAR : – ± 0.5mm
MACHINING : – ± 0.1mm
ANGULAR : – ± 0.5°

ECN Number
JJR–

TITLE 8 x 4 F97 OHL. VOLVO CHASSIS OVERALL / OPERATING DIMENSIONS

DRAFTING STANDARD AS1100

| SCALE | 1:40 | APP'D | MJS | DRAWING No. | A3 - J26 - 059 |
|---|---|---|---|---|---|
| DRAWN | Ron Reinke | DATE | 6/03/03 | REV | A | REV DATE |

| ITEM | DWG/PART No. | ITEM DESC. | PRODUCT | MATERIAL DESCRIPTION | LENGTH | MATERIAL | QTY | REMARKS |
|---|---|---|---|---|---|---|---|---|